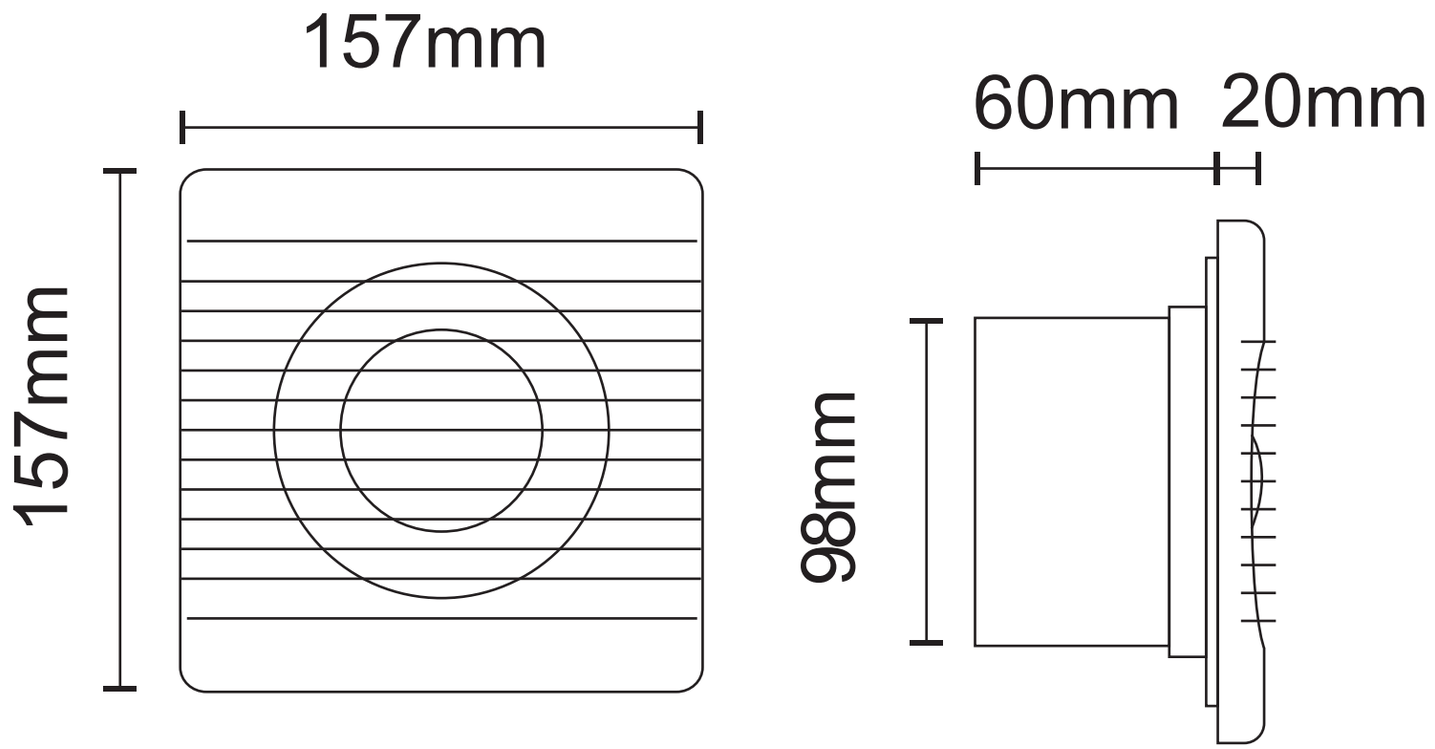
157mm
157mm
60mm
20mm
98mm